HANDY VACUUM CLEANER - BLOCK DIAGRAM

Renesas products are enclosed in red

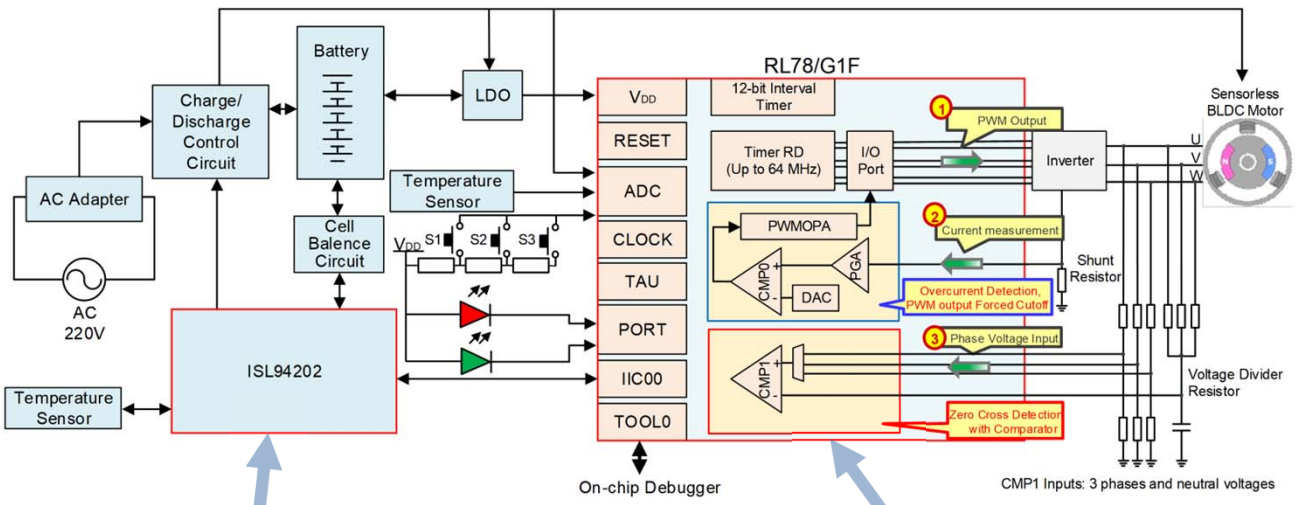

ISL94202 to monitor the Li-ion battery cell balance

RL78/G1F to control the motor with internal analog functions